Hisense

MULTI-SPLIT TYPE AIR CONDITONER

SERVICE MANUAL

V:7.1

AMC-12UX4SAA

AMC-18UX4SAA

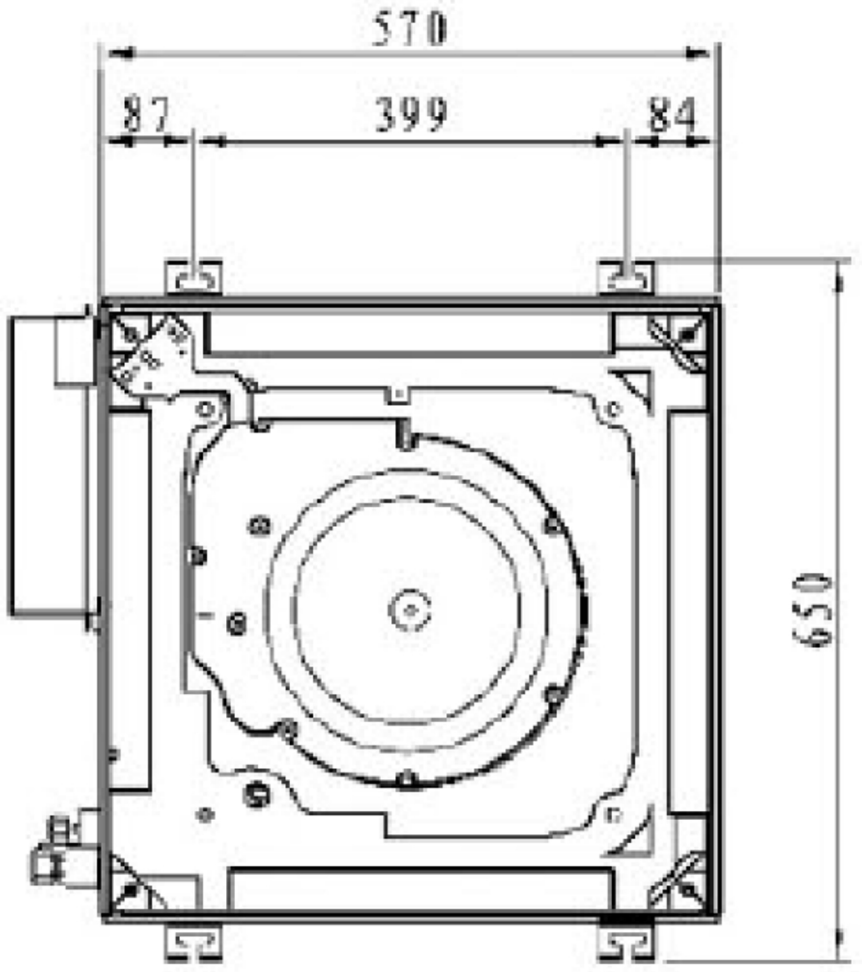

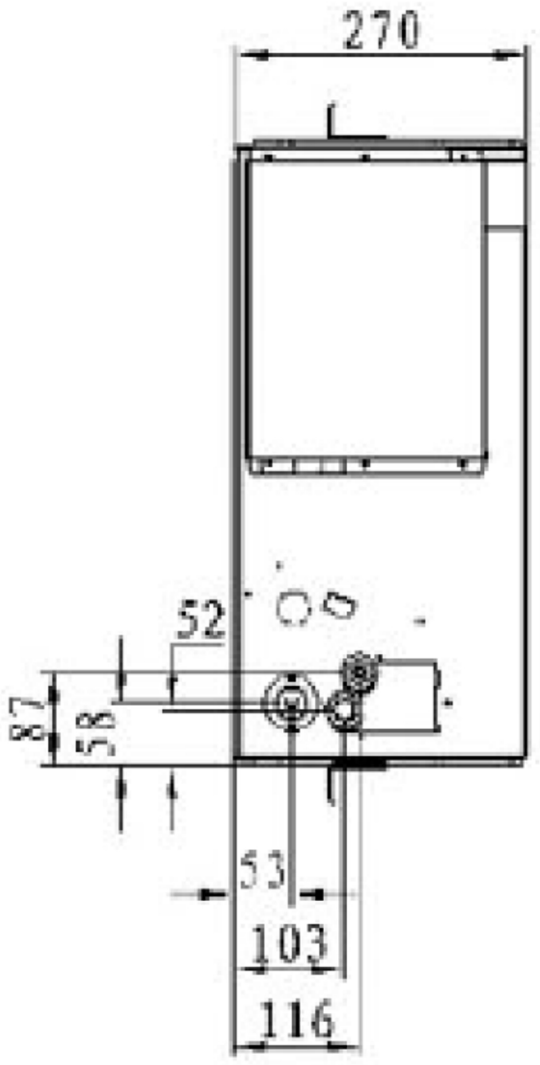

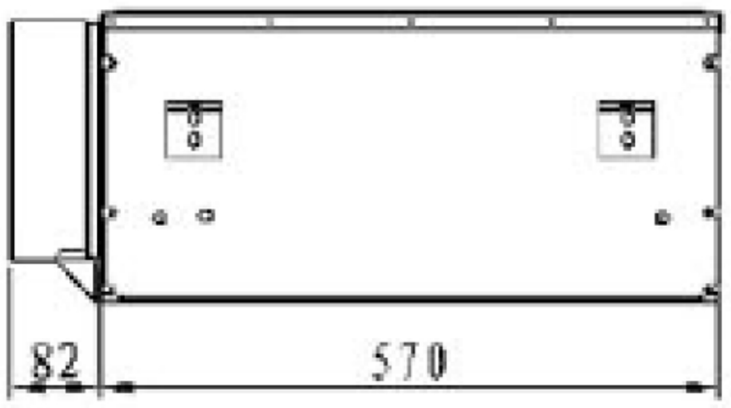

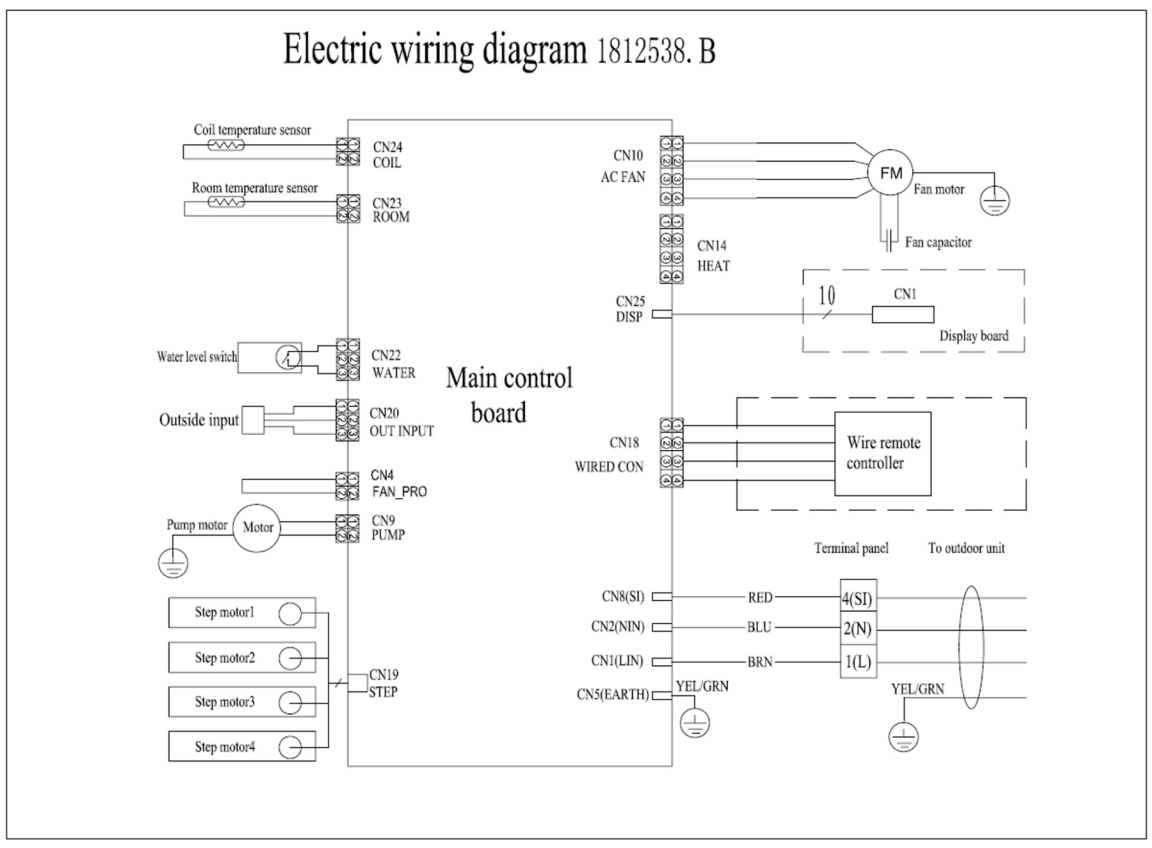

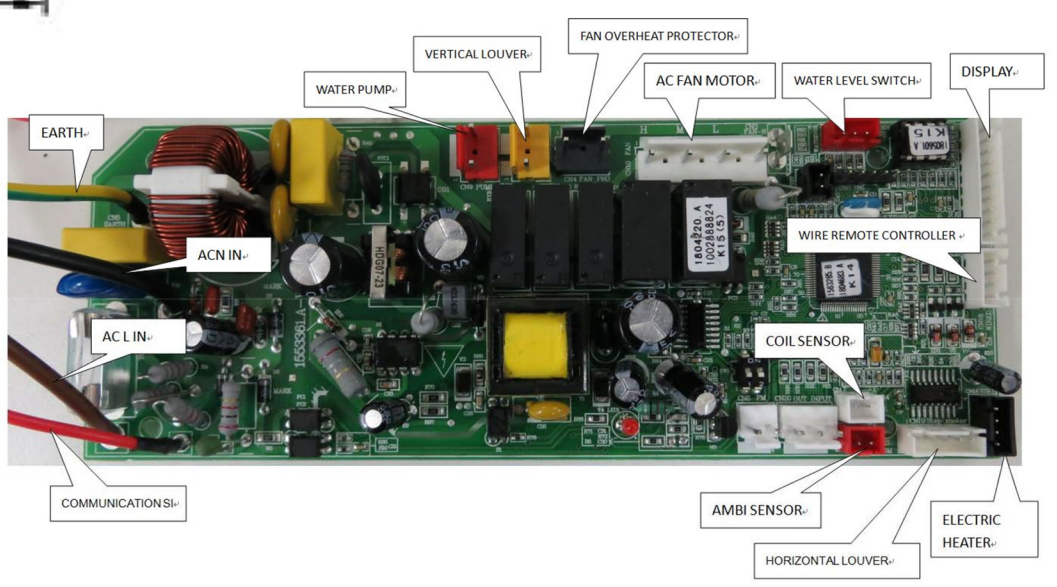

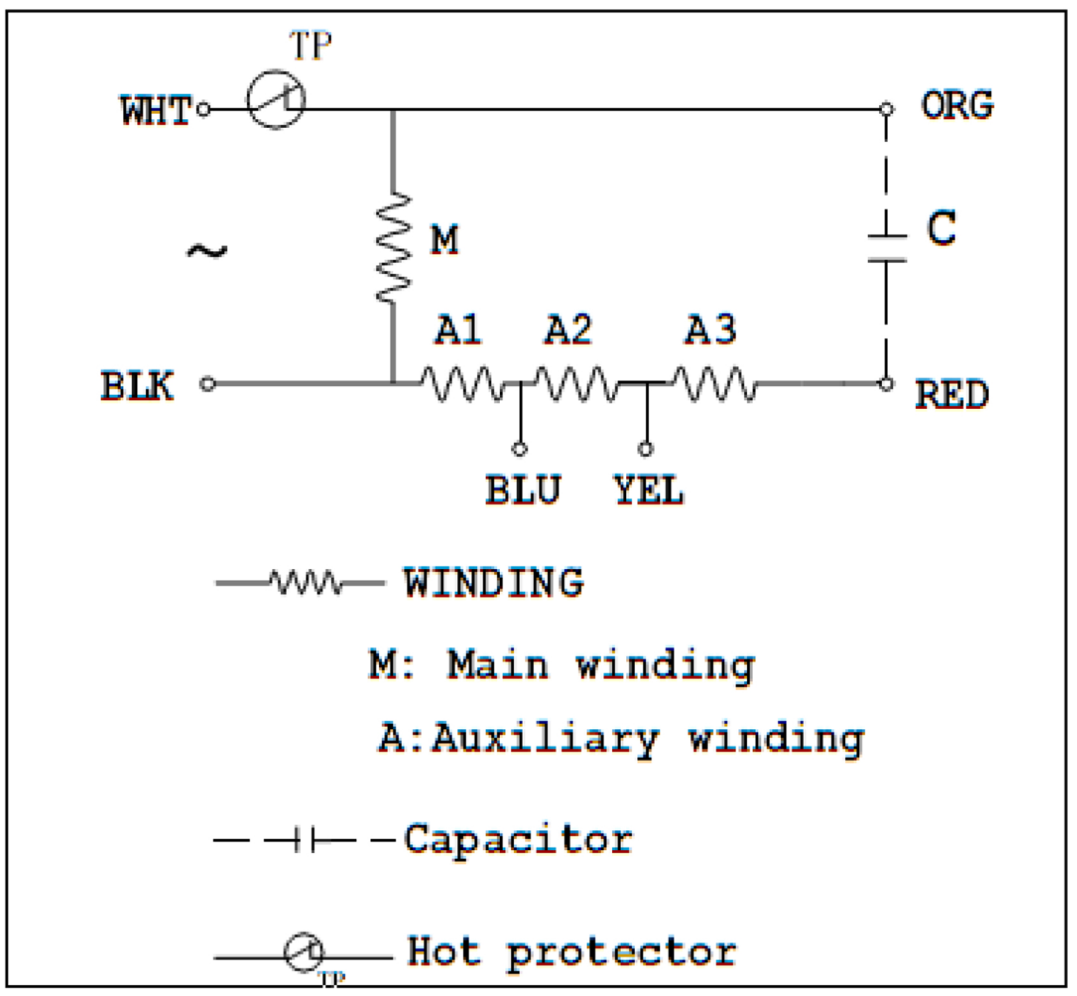

M:240Ω A1:60Ω A2:33Ω A3:143Ω

Model			AMC-12UX4SAA		AMC-18UX4SAA	
Function			Cooling	Heating	Cooling	Heating
Power supply			220V~240V/50Hz			
Capacity	Capacity	kW	3.5	4	5	5.5
	Dehumidification	l /h	2.0	----	2.0	----
	Air flow	m3/h	750	800	750	800
Electrical data	Running current	A	0.32	0.32	0.32	0.32
	Rated input	kW	70	70	70	70
	Auxiliary heater	A	----		----	
	Power factor	%	----		----	
	Starting current	A	----		----	
SEER/HSPF			----		----	
Compressor	Model		----		----	
	Winding resistance (at25℃)	Ω	----		----	
Indoor fan motor	Model		YDK95-28-4-B			
	Winding resistance (at20℃)	Ω	M:240;A:245			
Outdoor fan motor	Model		-----			
	Winding resistance (at20℃)	9.52	----			
Net size	L×W×H	cm	57x57x27（panel 65x65x3）		57x57x27（panel 65x65x3）	
Package size	L×W×H	cm	77X75X31（panel 73X73X13）		77X75X31（panel 73X73X13）	
Net weight		kg	21		21	
Gross weight		kg	25.5		25.5	
Refrigerant piping	Liquid pipe	mm	6.35		6.35	
	Gas pipe	mm	9.52		12.7	
	Connection method		----			
Special remarks	Air direction		----			
	Sound level (Hi)	dB	47		47	
	Fan speed (Hi)	rpm	980		980	
	Fan speed regulator		3		3	
	Refrigerant filling capacity(R410a)	kg	----			
	Throttle mode		----			

ELECTRIC PERFORMANCE	PARAMETER
	AMC-12UX4SAA AMD-18UX4SAA
Motor model	YDK95-28-4-B
Rated power source	220V 50Hz
Phases/Poles	1/4
Rated load output(W)	25
Rated speed(r/min)	720/840/980
Ambient temperature(℃)	-5℃～+43℃.

RUBISOLIS
Mikroklimato sprendimai