VC 150 E / VC 155 E

EN

OPERATING MANUAL
VACCUM CLEANER

TROTEC

TRT-BA-VC150E/VC155E-TC2020-34-002-EN

Table of contents

Notes regarding the operating manual 2
Safety 2
Information about the device 5
Transport and storage 6
Start-up 7
Operation 9
Errors and faults 10
Maintenance 11
Disassembly 14
Technical annex 15
Disposal 16

Notes regarding the operating manual

Symbols

Warning of electrical voltage
This symbol indicates dangers to the life and health of persons due to electrical voltage.

Warning of explosive substances
This symbol indicates dangers to the life and health of persons due to potentially explosive substances.

Warning
This signal word indicates a hazard with an average risk level which, if not avoided, can result in serious injury or death.

Caution
This signal word indicates a hazard with a low risk level which, if not avoided, can result in minor or moderate injury.

Note
This signal word indicates important information (e.g. material damage), but does not indicate hazards.

Info
Information marked with this symbol helps you to carry out your tasks quickly and safely.

Follow the manual
Information marked with this symbol indicates that the operating manual must be observed.

You can download the current version of the operating manual and the EU declaration of conformity via the following link:

VC 150 E
VC 155 E

https://hub.trotec.com/?id=44659

Safety

Read this manual carefully before starting or using the device. Always store the manual in the immediate vicinity of the device or its site of use.

Warning
Read all safety warnings and all instructions.
Failure to follow the warnings and instructions may result in electric shock, fire and/or serious injury.
Save all warnings and instructions for future reference.
This appliance can be used by children aged from 8 years and above and persons with reduced physical, sensory or mental capabilities or lack of experience and knowledge if they have been given supervision or instruction concerning use of the appliance in a safe way and understand the hazards involved.
Children shall not play with the appliance. Cleaning and user maintenance shall not be made by children without supervision.

- Do not open the device housing or the power adapter. There is danger of a short circuit.
- Keep device and power adapter away from open fire and hot surfaces and do not store or operate them in their vicinity.
- Do not pull the power adapter out of the socket by the connection cable, always hold on to the power adapter itself.
- Do not leave the device running unattended.
- Insert the mains plug into a properly secured mains socket.
- Allow the device to cool down before transport and/or maintenance work.
- Do not use the device in aggressive atmosphere.
- Do not use the device in potentially explosive rooms or areas and do not install it there.
- Do not use the device with wet or damp hands.

- Do not use this device near bathtubs, shower trays, swimming pools or other water containers. Risk of electric shock!
- Do not expose the device to directly squirting water.
- Never insert any objects or limbs into the device.
- Do not operate the device in the vicinity of eyes or ears. Nozzles and pipe ends must never get too close to eyes or ears.
- Let the device dry out after a wet clean. Do not operate it when wet.
- Do not under any circumstances use the device if you detect damages on the mains plug or power cable.
  If the power cable is damaged, it must be replaced by the manufacturer, its service agent or similarly qualified persons in order to avoid a hazard.
  Defective power cables pose a serious health risk!
- Do not sit on the device.
- Before carrying out maintenance, care or repair work on the device, remove the mains plug from the mains socket. Hold onto the mains plug while doing so.
- The electrical connection must correspond to the specifications in chapter Technical data.
- Check accessories and connection parts for possible damage prior to every use of the device. Do not use any defective devices or device parts.
- Make sure that the suction side is kept free of dirt and loose objects.
- Make sure that the suction inlet and air outlets are not obstructed. A blocked air circuit can lead to overheating and device damage.
- Do not use the device while it is connected to the power adapter.
- Clean the dust filter, the filter bag and the collection container on a regular basis to prevent a motor overload.
- Do not exchange any accessories during operation.
- Do not use the hand-held vacuum cleaner without inserted dust filter.

General Battery Pack / Charger Safety Warnings

- **Use products only with the specifically designated battery packs.** Use of any other battery packs may create a risk of injury and fire.
- **Recharge only with the charger specified by the manufacturer.** A charger that is suitable for one type of battery pack may create a risk of fire when used with another battery pack.
- **Do not charge other battery packs.** The charger is only suitable for use with the supplied battery pack and with the voltages specified in the technical data. Otherwise, there is a risk of fire and explosion.
- **Under abusive conditions, liquid may be ejected from the battery.** Avoid contact. If contact accidentally occurs, flush with water. If liquid contacts eyes, additionally seek medical help. Liquid ejected from the battery may cause irritation or burns.
- **In case of damage and improper use of the battery, vapours may be emitted.** Provide for fresh air and seek medical help in case of complaints. The vapours can irritate the respiratory system.
- **Do not open the battery.** There is danger of a short circuit.
- **Do not short-circuit the battery.** There is danger of explosion.
- **Batteries must not be exposed to mechanical impacts.**
- **Protect electrical parts against moisture. To prevent an electric shock, never immerse them in water or other liquids during cleaning or operation.** Never hold the charger under running water. Please observe the instructions for cleaning and maintenance.
- **The charger is only suited for indoor use.**
- **Keep the charger clean.** Contamination entails a risk of electric shock.
- **Do not operate the charger on highly combustible ground (e.g. paper, textiles etc.) or in an inflammable environment.** The heat generated by the charger during charging entails a risk of fire.
- **Only use the charger for charging the battery.** The charger must not be used as power supply for the power tool.

Intended use

Use the device VC 150 E / VC 155 E to vacuum hard surfaces and carpeted floors, tables, upholstery, keyboards as well as dry surfaces or dry material to be vacuumed in the household or car, complying with the technical data.

We recommend using the device with original Trotec accessories.

Foreseeable misuse

The device must only be used as intended. Any other use possibly exceeding the intended purpose is considered to be improper use. The user/operator shall be liable for any consequential damages or injuries resulting from improper use, not the manufacturer. Please bear in mind that this device is not designed for commercial and industrial applications or for use in craft enterprises. We do not accept any liability if the device is used in business, craft or industrial enterprises as well as for similar applications.

Do not use this device for vacuuming on people or animals.

The device must not be used with a damaged or without an inserted cyclone unit.

The device is not intended for vacuuming the following materials:

- lit matches
- ember
- cigarette stubs
- moist material to be vacuumed (liquids)
- large or sharp objects or glass splinters
- stone dust
- gypsum
- cement or similar particles
- combustible and/or aggressive materials or liquids
- harmful substances

The device may not be used in potentially explosive atmospheres, when wet or very humid.

Any other use than the one described in the chapter "Intended use" is regarded as reasonably foreseeable misuse.

Personnel qualifications

People who use this device must:

- be aware of the dangers that occur when working with electric devices in damp areas.
- have read and understood the operating manual, especially the Safety chapter.

Residual risks

Warning of electrical voltage

Electric shock from insufficient insulation.
Check the device for damages and proper functioning before each use.
If you notice damages, no longer use the device.
Do not use the device when the device or your hands are damp or wet!

Warning of electrical voltage

Work on the electrical components must only be carried out by an authorised specialist company!

Warning of electrical voltage

There is a risk of a short-circuit due to liquids penetrating the housing!
Do not immerse the device and the accessories in water. Make sure that no water or other liquids can enter the housing.

Warning of explosive substances

Do not expose the battery to temperatures above 45 °C! Do not let the battery come into contact with water or fire! Avoid direct sunlight and moisture. There is a risk of explosion!

Warning

Dangers can occur at the device when it is used by untrained people in an unprofessional or improper way! Observe the personnel qualifications!

Warning

The device is not a toy and does not belong in the hands of children.

Warning

Risk of suffocation!
Do not leave the packaging lying around. Children may use it as a dangerous toy.

Caution

Keep a sufficient distance from heat sources.

Note

If you store or transport the device improperly, the device may be damaged.
Note the information regarding transport and storage of the device.

Information about the device

Device description

The device VC 150 E / VC 155 E is ideally suited for vacuuming dry surfaces in the household or in the car.

With the crevice nozzle supplied, or the upholstery and furniture brush the device can be used as a cordless hand-held vacuum cleaner

By mounting the extension pipe in connection with the electrical floor nozzle the device can also be used as cordless upright vacuum cleaner. The electrical floor nozzle comes equipped with LED lamps for illuminating dark spots like for example underneath the sofa.

The device is provided with a filter system with cyclone technology and can be operated at two suction levels.

The devices VC 150 E and VC 155 E are technically identical and only differ with regard to the colour of their device housing.

Device depiction

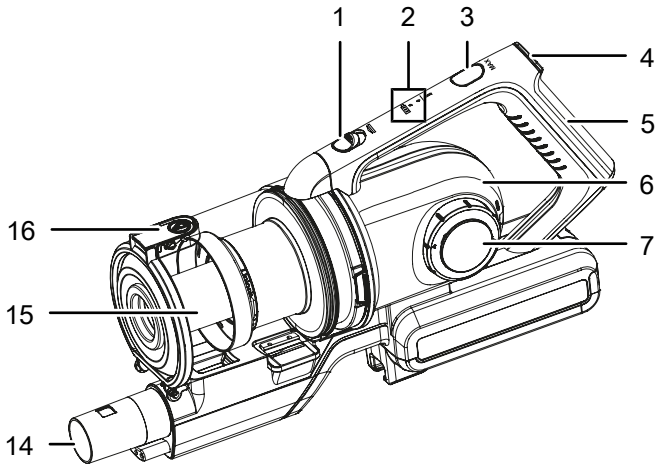

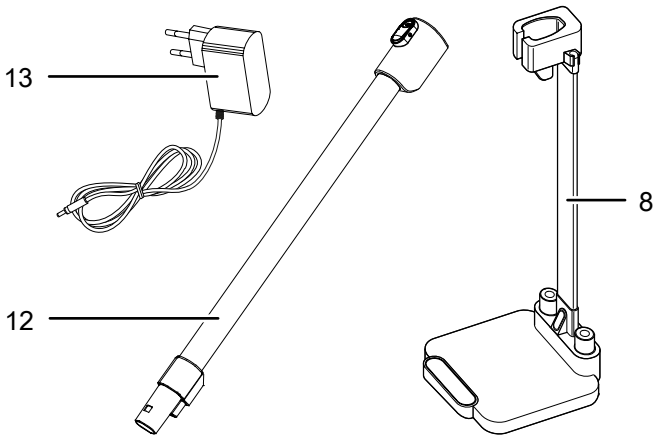

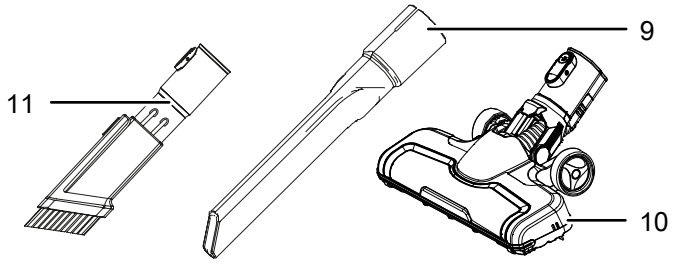

No.	Designation
1	Release button of collection container
2	Operating control lamp / battery level indication
3	Operating button of MAX suction level
4	On/off switch
5	Handle
6	Motor housing
7	Air outlet with filter
8	Deposit station
9	Crevice nozzle
10	Floor nozzle
11	Upholstery and furniture brush
12	Extension pipe
13	Power adapter
14	Suction nozzle retainer
15	Collection container with HEPA filter
16	Release button for collection container flap

Scope of delivery

- 1 x Hand-held vacuum cleaner
- 1 x Power adapter
- 1 x Upholstery and furniture brush
- 1 x Crevice nozzle
- 1 x Electrical floor nozzle
- 1 x Extension pipe
- 1 x Deposit station
- 1 x Manual

Technical data

Parameter	Value
Model	**VC 150 E / VC 155 E**
Power consumption	150 W
Max. capacity of the dust container:	650 ml
Max. runtime	40 minutes
Weight	1,5 kg
Length of extension pipe	64 cm
Dimensions (length x width x height)	23 x 25 x 111 cm
Battery (integrated)	
Type	Li-ion
Nominal voltage	25,2 V
Capacity	2 Ah
Number of cells	7
charger	
Input	
Nominal voltage	100 – 240 V / 50 – 60 Hz
Power consumption	2,2 W
Output	
Nominal voltage	29.5 V ⎓
Charging current	500 mA
Charging time	4 to 6 h
Protection class	II / ⧈

Transport and storage

Note

If you store or transport the device improperly, the device may be damaged.
Note the information regarding transport and storage of the device.

Transport

Before transporting the device, observe the following:

- Switch off the device.
- Hold onto the mains plug while pulling the power cable of the charger out of the mains socket.
- Allow the device to cool down.

The supplied Li-ion batteries are subjects to the requirements of dangerous goods legislation.

Observe the following when transporting or shipping Li-ion batteries:

- The user may transport the batteries by road without any additional requirements.
- If transport is carried out by third parties (e.g. air transport or forwarding company), special requirements as to packaging and labelling must be observed. This includes consulting a dangerous goods specialist when preparing the package.
  - Only ship batteries if their housing is undamaged.
  - Please also observe any other national regulations.

Storage

Before storing the device, observe the following:

- Switch off the device.
- Hold onto the mains plug while pulling the power cable of the charger out of the mains socket.
- Allow the device to cool down.
- Never store the device in a way that it could fall into a bathtub or sink.
- Clean the device as described in the Maintenance chapter.
- Do not store Li-ion batteries which are completely discharged. Storing discharged batteries can lead to a deep discharge and thus damage the battery.

When the device is not being used, observe the following storage conditions:

- dry and protected from frost and heat
- Ambient temperature below 45 °C
- protected from dust and direct sunlight

Start-up

Unpacking the device

- Take the device and the accessories out of the packaging.
- Check the contents of the packaging for completeness and look for damages.

Warning of electrical voltage
Electric shock from insufficient insulation.
Check the device for damages and proper functioning before each use.
If you notice damages, no longer use the device.
Do not use the device when the device or your hands are damp or wet!

Warning
Risk of suffocation!
Do not leave the packaging lying around. Children may use it as a dangerous toy.

- Dispose of the packaging material according to the national regulations.

Charging the battery

Note
The battery can be damaged in case of improper charging.
Never charge the battery at ambient temperatures below 10 °C or above 40 °C.

The battery is partially charged upon delivery to avoid damage to the battery caused by a deep discharge.

Prior to initial start-up and when the battery is low (only the bottom LED (17) in the operating control lamp / battery level indication is illuminated (2)), the battery should be charged.

1. Make sure that the device is switched off.
2. Position the device in the fixture of the deposit station (8).
3. Plug the barrel-type connector of the supplied power adapter (13) into the power adapter socket (19) located beneath the motor housing.

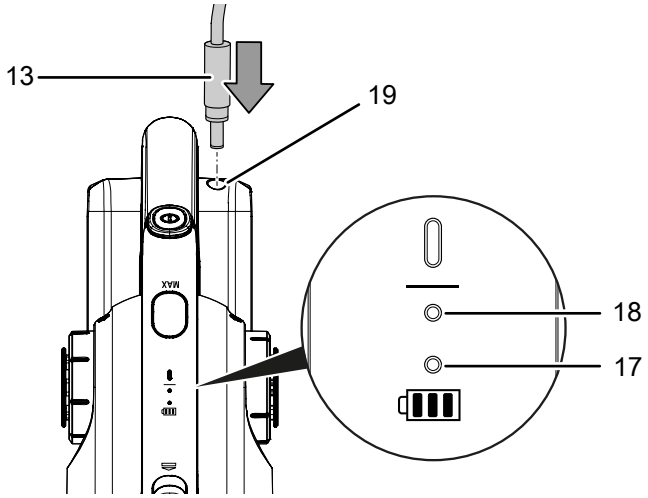

4. Insert the mains plug into a properly secured mains power socket.
   ⇨ The LED 1(17) of the operating control lamp / battery level indication (2) flashes red and the charging process starts.
   ⇨ Charging requires approx. 4 to 6 hours.
5. Wait until LEDs 1 and 2 (17, 18) of the battery level indication (2) goes out.
   ⇨ The battery is fully charged.
6. Unplug the power adapter (13) from the power adapter socket (19).
   ⇨ The device and the power adapter may have become warm during charging.

Info
The device cannot be started when the charger is connected.

Checking the battery charging status

The charging status of the battery is displayed by the operating control lamp / battery level indication (2) as follows:

LED 1 (17)	**LED 2** (18)	**Meaning**
Is off	Is off	The battery is fully charged.
Is permanently lit.	Flashes.	The battery is currently charging, the battery capacity is at least 50 %
Flashes.	Is off	The battery is currently charging.

Replace nozzle attachments

Please proceed as follows to remove or insert a nozzle attachment:

✓ The device is switched off.

1. Press the release button (20) of the nozzle attachment and remove the nozzle attachment that is possibly mounted.

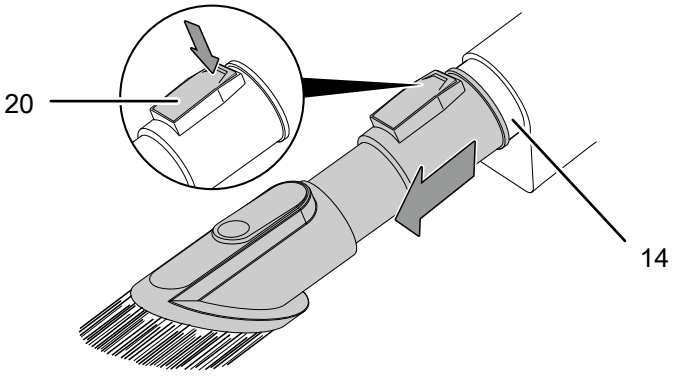

2. Insert the desired nozzle attachment into the suction nozzle retainer with the connection side (14) until it engages audibly.

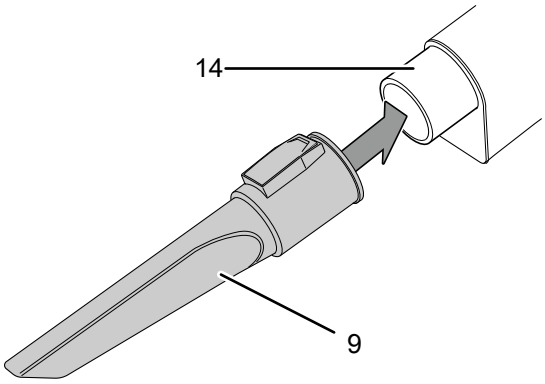

⇨ The device may now be used with the connected nozzle attachment.

Adapting the upholstery and furniture brush

1. Press the release button (22) on the brush head (21).
2. Insert the brush head (21) into the desired position until it engages audibly.

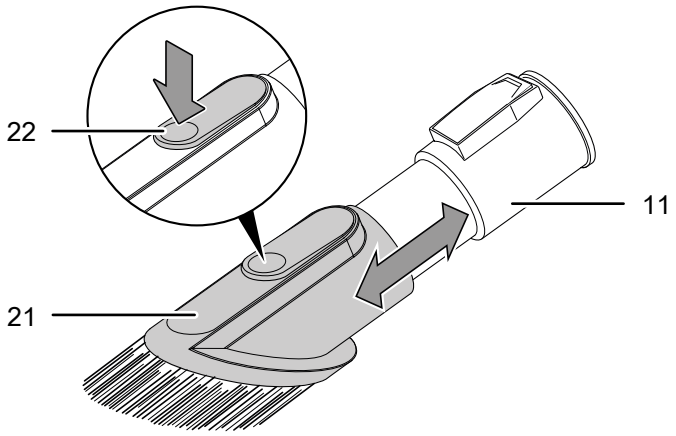

⇨ Move the brush head forwards for vacuuming furniture surfaces.

⇨ Move the brush head backwards for vacuuming narrow places, corners or upholstered furnitures.

Using the extension pipe

Optionally, the device can be equipped with an extension pipe (12). Please proceed as follows to attach the extension pipe (12) to the device:

✓ The device is switched off.

1. Press the release button (20) on the nozzle that is possibly mounted in order to remove the nozzle.
2. Insert the extension pipe (12) into the suction nozzle retainer with the connection side (14) until the extension pipe (12) engages audibly.
3. Mount the desired nozzle on the extension pipe (12).

Using the electrical floor nozzle

✓ The device is switched off.
✓ The extension pipe (12) is mounted.
1. Press the release button (20) on the nozzle mounted in order to remove the nozzle.
2. Insert the electrical floor nozzle (10) into the suction nozzle retainer with the connection side (12) until it engages audibly.

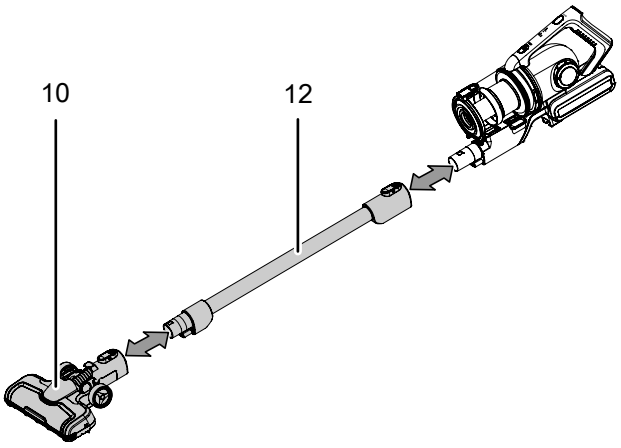

⇨ The device may now be used with the electrical floor nozzle (10).

Placing the device in the deposit station

Please proceed as follows to place the device in the deposit station for storage (8).

✓ The device is switched off.
✓ The extension pipe (12) and the electrical floor nozzle (10) are pre-assembled.
1. Place the device into the holder (23) of the deposit station in an upright position (8).
2. Ensure that the extension pipe (12) is attached correctly to the device holder (23).

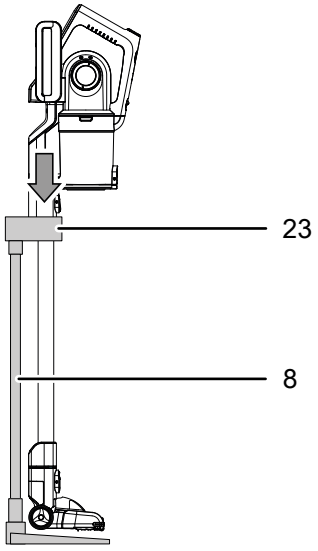

Operation

Tips and notes on handling the cordless upright vacuum cleaner

General information:

- Before vacuuming, refer to the respective manufacturer to obtain care instructions for your flooring or floors.
- Never use the device without the cyclone unit or the inserted HEPA filter.
- Do not vacuum any sharp objects, as they can damage the device or can get caught in the device and cause blockages.

How to use the electrical floor nozzle:

- Do not use the electrical floor nozzle on the same spot for a long time. The shininess of delicate or waxed floors may become patchy.
- Before using the electrical floor nozzle make sure that no sharp impurities are sticking to the bottom side or inside the brush roller. This could produce scratches on sensitive surfaces, like for example on polished wooden floorboards.

Using the upholstery and furniture brush

- Only apply little pressure on the brush. If you apply too much pressure, the brush hairs may permanently bend.

Switching the device on

1. Press the on/off switch (4) to switch on the device.

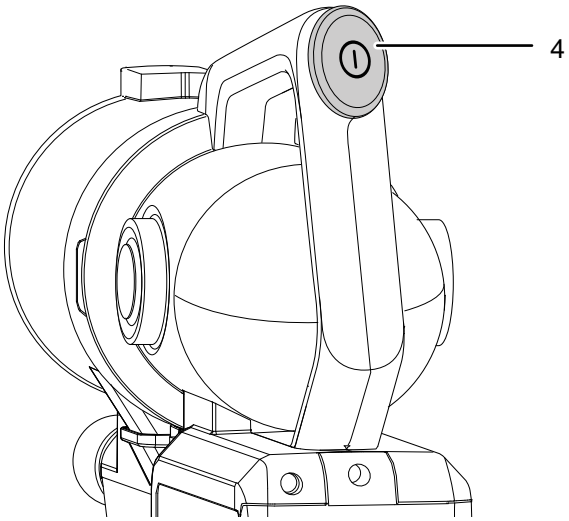

⇨ The operating control lamp / battery level indication (2) is illuminated.
⇨ The device is switched on and operating.

Switch on MAX suction level

1. Press the operating button MAX suction level (3) once.

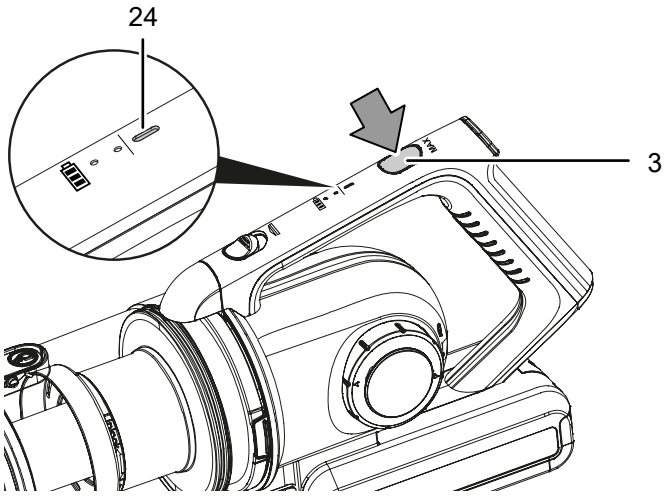

   ⇨ The vacuum power is increased and the LED display (24) lights up.
2. To switch off the MAX suction level (3), press the operating button MAX suction level (3) again.
   ⇨ If the MAX suction level (3) is switched off, the LED display (24) goes out.

Switching the device off

1. Press the on/off switch (4) to switch off the device.
   ⇨ The operating control lamp / battery level indication (2) is no longer illuminated.
   ⇨ The device is switched off.

Shutdown

- Switch off the device.
- Hold onto the mains plug while pulling the power cable of the charger out of the mains socket.
- Clean the device according to the Maintenance chapter.
- Store the device according to the Storage chapter.

Errors and faults

The device has been checked for proper functioning several times during production. If malfunctions occur nonetheless, check the device according to the following list.

Troubleshooting tasks which require the housing to be opened must only be carried out by an authorized specialist electrical company or by Trotec.

Light smoke or odour is emitted during the first use:

- This is not a fault. These phenomena disappear after a brief runtime.

The battery does not charge:

- Check whether the device is correctly connected to the charger and whether the charger is correctly connected to the power supply.
- Check the power connection.
- Check the power cable and mains plug for damages.
- Check the fuse (home).
- Check the charger for damages. Should the charger be damaged, stop using it. Contact the Trotec customer service.
- Check the charger connection for dirt. Remove any dirt.
- The battery might be defective. Contact the Trotec customer service.

The device becomes hot:

- Keep the venting slots clear to prevent the motor from overheating.
- Check the air outlet filters regularly and keep them free from dirt. Blocked air outlet filters can cause overheating of the motor.
- Check the device for blockages, large objects can block the suction nozzles or the collection container. An interrupted air flow causes motor overheating. Remove potential blockages and do not vacuum any large objects.

Info
Wait for at least 10 minutes before switching the device back on.

The device does not start:

- The battery power might be too low. Recharge the battery.
- Check the charger and charging socket for dirt. Remove any dirt.
- Check whether the charger is connected. If the charger is connected, the device will not start.

The suction capacity is low:

- Check the device for blockages, large objects can block the suction nozzles or the collection container. Remove potential blockages. Watch out for sharp objects, they can cause injuries.
- Check the cyclone unit and HEPA filter for dirt. Clean the cyclone unit and HEPA filter as described in the "Cleaning" section.
- Check the brush roller on the floor nozzle, hair and dirt may have coiled round the brush roller and are blocking it. Remove and clean the brush roller as described in the Cleaning chapter.

Info
Wait for at least 10 minutes before switching the device back on.

Note
Wait for at least 3 minutes after maintenance and repair work. Only then switch the device back on.

Your device still does not operate correctly after these checks?

Please contact the customer service. If necessary, bring the device to an authorised specialist electrical company or to Trotec for repair.

Maintenance

Activities required before starting maintenance

Warning of electrical voltage
Do not touch the mains plug of the charger with wet or damp hands.

- Switch the device off.
- Hold onto the mains plug while pulling the power cable of the charger out of the mains socket.
- Allow the device to cool down completely.

Warning of electrical voltage
Maintenance tasks which require the housing to be opened must only be carried out by authorised specialist companies or by Trotec.

Notes on maintenance

Cleaning

The device should be cleaned before and after each use.

Note
The device does not have to be lubricated after cleaning.

Warning of electrical voltage
There is a risk of a short-circuit due to liquids penetrating the housing!
Do not immerse the device and the accessories in water. Make sure that no water or other liquids can enter the housing.

- Clean the device with a soft, damp and lint-free cloth. Make sure that no moisture enters the housing. Protect electrical components from moisture. Do not use any aggressive cleaning agents such as cleaning sprays, solvents, alcohol-based or abrasive cleaners to dampen the cloth.
- Dry the device with a soft, lint-free cloth.
- Keep the connecting terminals on the device and charger clean.
- Keep the ventilation openings free from dust deposits to prevent overheating of the motor.

Emptying the collection container

Empty the collection container when the dirt particles collected have reached the MAX marking (26). To make it easier to empty the container, the nozzle or extension pipe possibly mounted must be removed.

Please proceed as follows to empty the collection container:

✓ The device is switched off.

1. Hold the device so that the collection container (15) points downwards.
2. To open the bottom flap of the collection container (25), press the release button for the collection container flap (16).

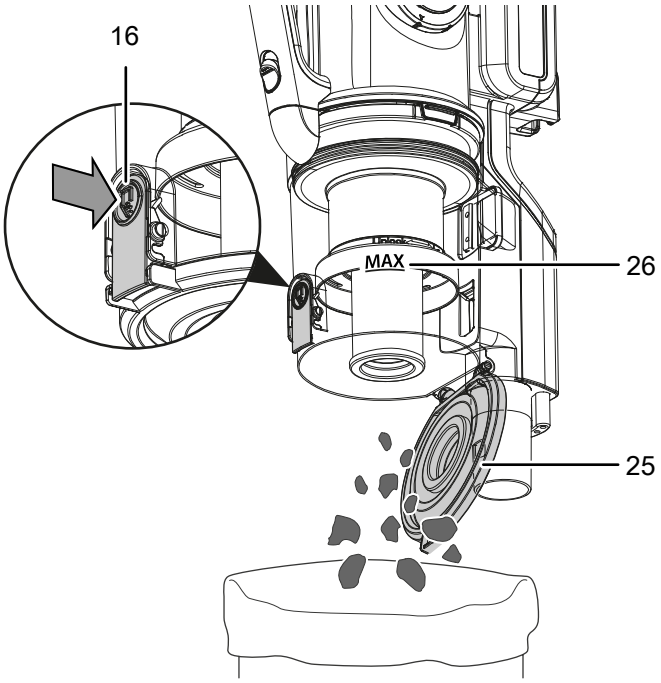

3. Empty the collection container (15) and close the flap manually until it engages and is secured.

Info

Empty the collection container (15) and clean the cyclone unit (27) and the HEPA filter (28) after every use so as not to reduce the device efficiency and to prevent motor overload.

Cleaning the collection container and cyclone unit

Please proceed as follows to clean the cyclone unit (27) and the collection container (15):

✓ The device is switched off.

1. Remove the cyclone unit (27) from the collection container (15).

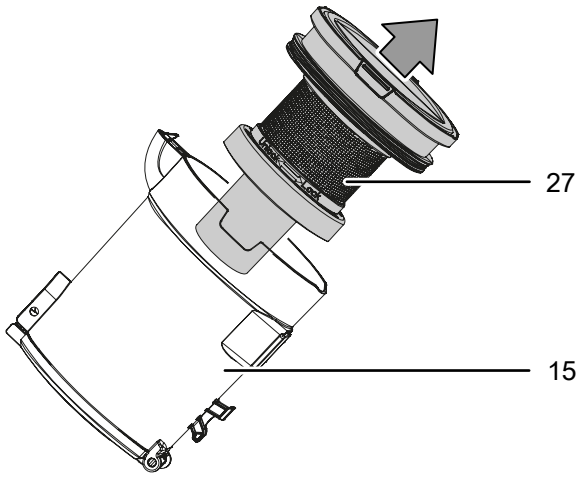

2. Pull the HEPA filter (28) out from the cyclone unit (27).

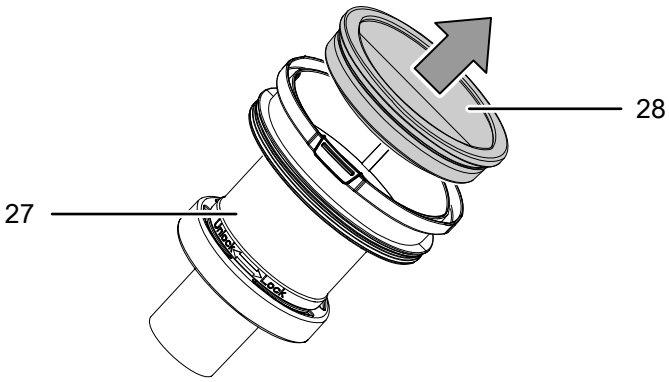

3. Disassemble the lower part of the cyclone unit (27) by turning it in the "UNLOCK" direction.

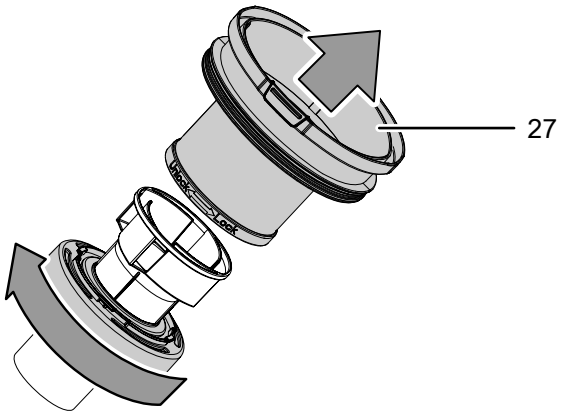

4. Remove the coarse dirt from all components and rinse the collection container (15) and the parts of the cyclone unit (27) with cold water. Allow all parts to air-dry. Make absolutely sure that the HEPA filter (28) does not get wet. It must only be cleaned in a dry condition.

Before start-up, the cyclone unit (27) must be re-assembled and inserted into the collection container (15). To do so, please proceed as follows:

1. Re-assemble the cyclone unit (27) by joining the two parts together again and turning the lower part of the cyclone unit in the "LOCK" direction.
2. Insert the HEPA filter (28) into the dry cyclone unit (27).
3. Insert the cyclone unit into the collection container (15).
4. Re-attach the collection container (15) to the device by inserting the connecting lug (29) of the collection container (15) into the housing recess first and then let the collection container (15) engage in its position.

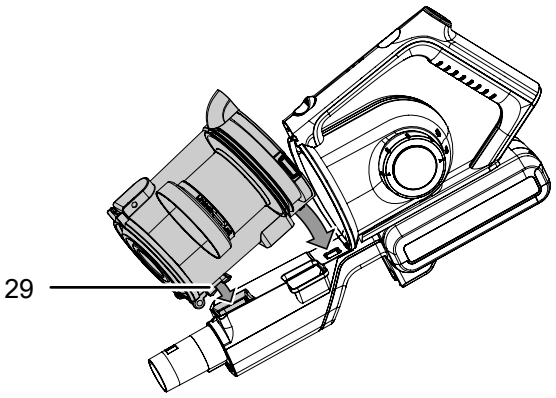

Cleaning the air outlet filters

Check the two air outlet filters regularly (7) and remove coarse dirt and dirt deposits from them.

✓ The device is switched off.

1. Dismount the covers (30) from both sides of the two air outlet filters (7) by turning them in counter-clockwise direction and removing them.

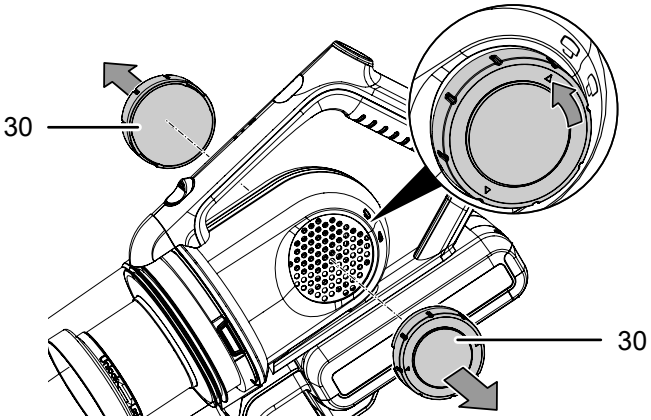

2. Remove the air outlet filters (7) from the covers.

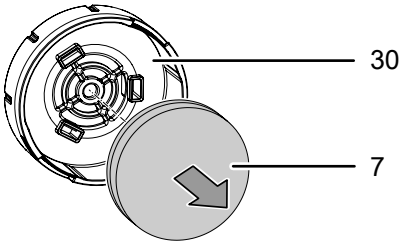

3. Remove coarse dust and dirt deposits and rinse the air outlet filters (7) with clear water. Observe that the air outlet filters must dry for 24 hours afterwards.
4. Re-insert the clean and dry air outlet filters (7) into the two covers.
5. Mount the covers (30) of the two air outlet filters by inserting them into the motor housing (6) and turning them in clockwise direction until they engage audibly.

Check the two air outlet filters regularly (7) and remove coarse dirt and dirt deposits from them.

Cleaning the electrical floor nozzle

To make it easier to clean the floor nozzle, the brush roller (33) of the electrical floor nozzle (10) can be removed. To do so, please proceed as follows:

✓ The floor nozzle is not mounted on the vacuum cleaner.

1. On the bottom side of the electrical floor nozzle (10) open the latch (31) by slightly pressing on the tongue of the latch (32).
2. Open the latch (31) and remove it.

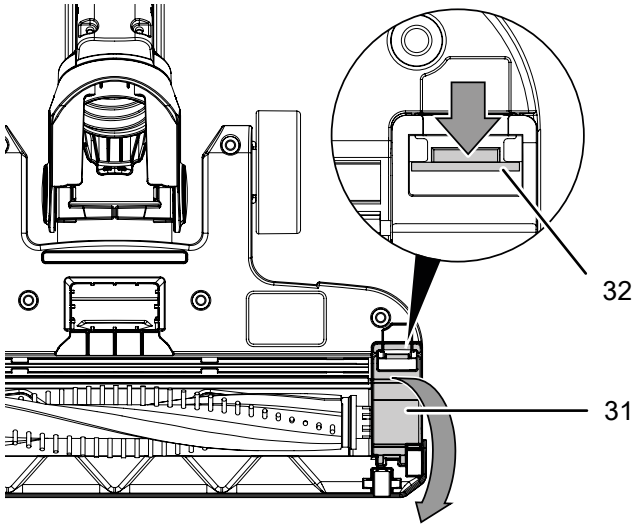

3. Take out the brush roller (33) and manually remove any soiling. Observe that the brush roller (33) must only be cleaned in dry condition.

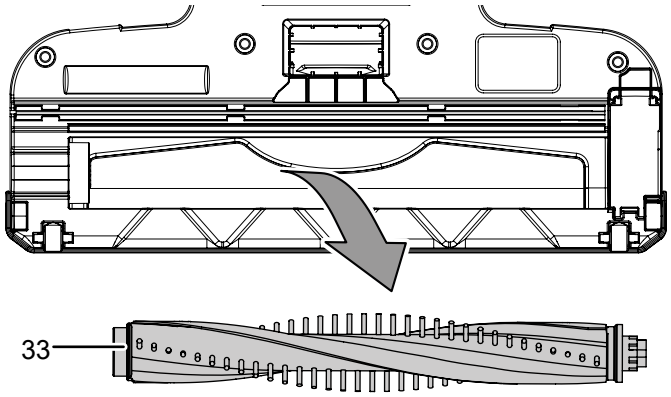

4. Re-insert the clean brush roller (33). In doing this, start with the opposite side of the latch fastening.
5. Insert the latch (31) and close it again until it engages audibly.

Disassembly

Battery removal and disposal

1. Completely discharge the battery by letting the device run until the motor stops.
2. Loosen the 3 screws at the battery case (34).
3. Open the battery case (34).
4. **Version A (without plug connection):** Hold onto the battery (35) and disconnect the wiring by means of a wire cutter. Insulate the severed wire ends of the battery with tape to prevent a short circuit.
   Version B (with plug connection): Hold onto the battery (35) and disconnect the plug connections of the wiring.

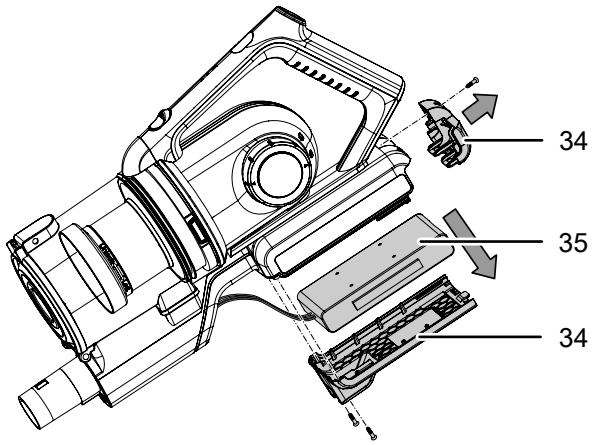

5. Dispose of the battery and the device as described in the Disposal chapter.

Technical annex

Overview of spare parts

Note: The position numbers of the spare parts differ from those describing the positions of the components mentioned in these instructions.

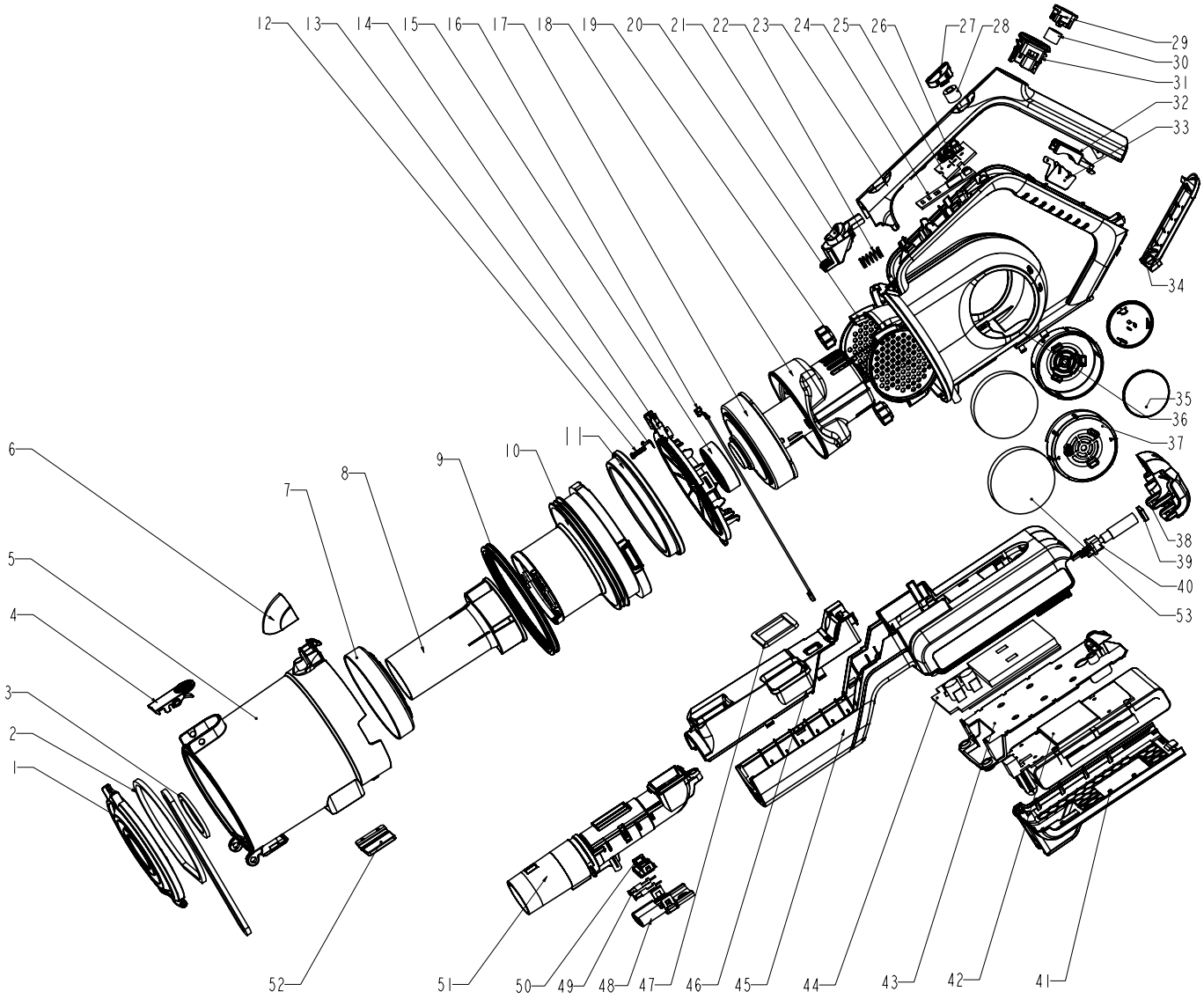

Spare parts list

No.	Spare part	No.	Spare part	No.	Spare part
1	Dust cup cover	19	Motor Cover Shock Ring	37	Air Oulet Plate
2	Sealing ring of Dust cup cover	20	Motor outcover	38	Battery Pack Cover
3	Sealing ring of dust cup cyclone	21	Cup block	39	Block
4	Bottom cover lock	22	Spring	40	Wire
5	Dust cup	23	Handle cover	41	Battery Cover
6	Dust cup decorative cover	24	LED	42	Battery Assembly
7	Plate	25	Type h light barrier eva	43	Battery Baffle
8	Cyclone	26	Indicator lamp shade	44	Main PCB
9	Sealing ring of cup	27	Speed Button	45	Lower Body Panel
10	Dust cup cyclone	28	Sealing Strip	46	Lower Housing
11	Non woven filter components	29	Switch Button	47	Dust Cup Suction Block
12	Screw	30	Sealing Strip	48	Contact Tube Assembly
13	Leaf spring	31	Switch Seat	49	Wire
14	Inlet grid tray	32	SHARPNEL BRACKET	50	Contact Tube Assembly
15	SEALING RING	33	Anti static sheet	51	Guide Duct
16	Wire	34	Handle Lower Cover	52	Dust Cup Suction Block
17	Motor	35	Air Oulet Plate ornament	53	Sponge
18	Motor cover	36	Main body		

Disposal

The icon with the crossed-out waste bin on waste electrical or electronic equipment stipulates that this equipment must not be disposed of with the household waste at the end of its life. You will find collection points for free return of waste electrical and electronic equipment in your vicinity. The addresses can be obtained from your municipality or local administration. For further return options provided by us please refer to our website https://de.trotec.com/shop/.

The separate collection of waste electrical and electronic equipment aims to enable the re-use, recycling and other forms of recovery of waste equipment as well as to prevent negative effects for the environment and human health caused by the disposal of hazardous substances potentially contained in the equipment.

In the European Union, batteries and accumulators must not be treated as domestic waste, but must be disposed of professionally in accordance with Directive 2006/66/EC of the European Parliament and of the Council of 6 September 2006 on batteries and accumulators. Please dispose of batteries and accumulators according to the relevant legal requirements.

Trotec GmbH

Grebbener Str. 7
D-52525 Heinsberg
+49 2452 962-400
+49 2452 962-200

info@trotec.com
www.trotec.com